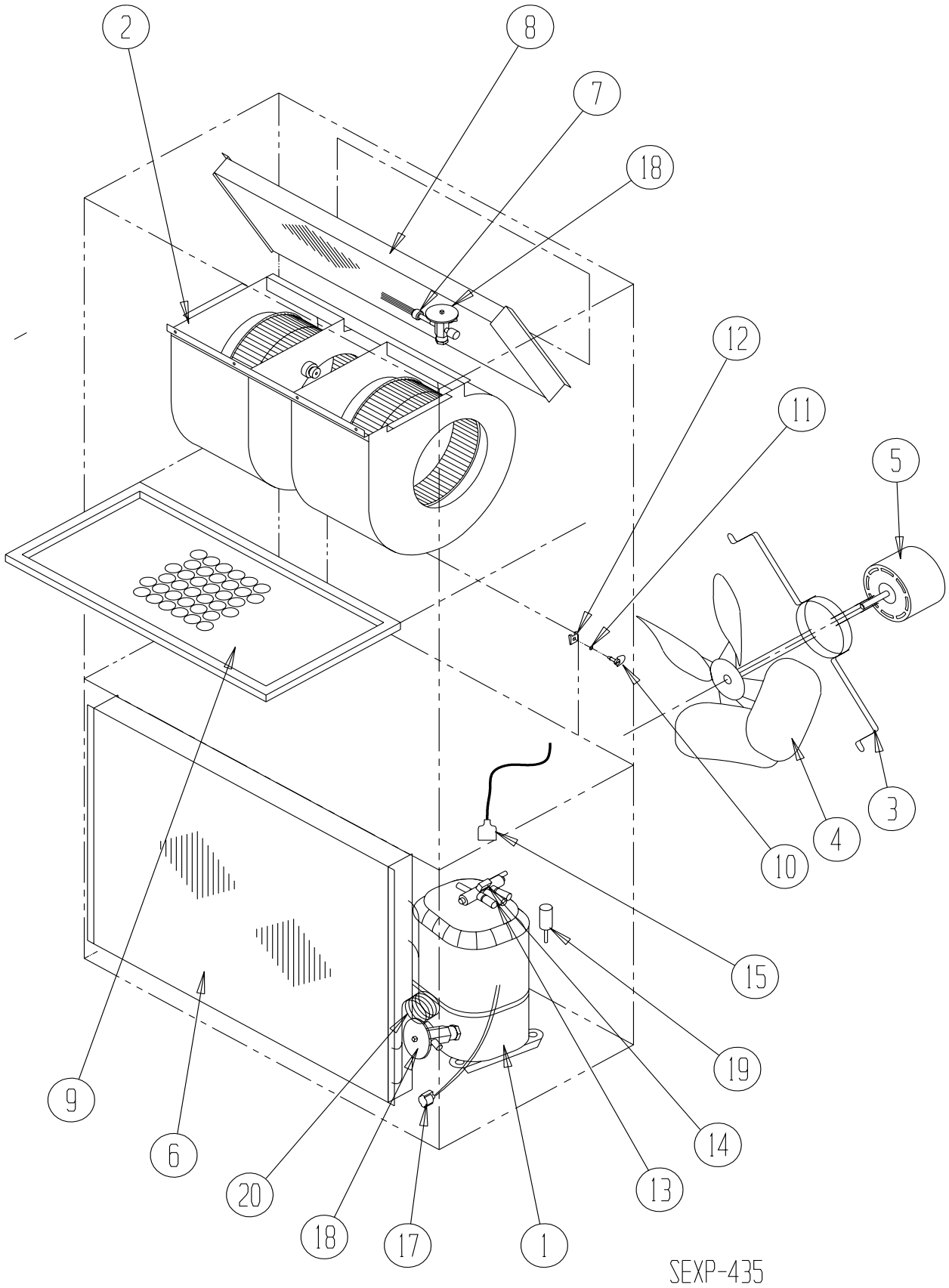FUNCTIONAL COMPONENTS